Finding Angles Practice

Name _____

Block _____ Date _____

Find all missing variables listed:

1

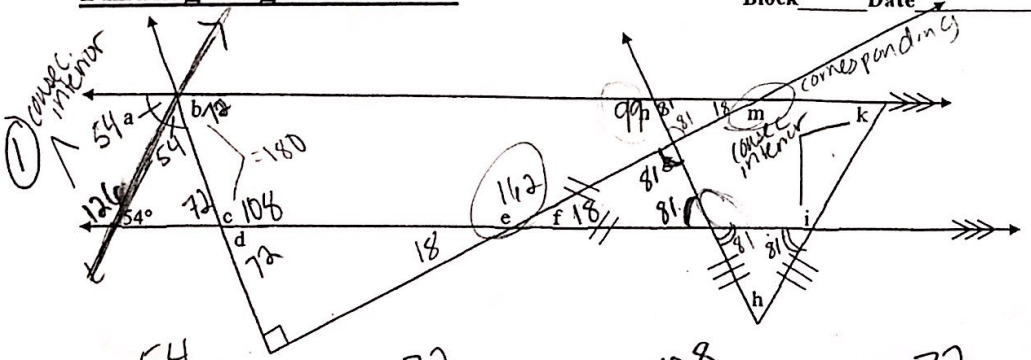

a = 54 b = 72 c = 108 d = 72

e = 162 f = 18 g = 81 h = 18

i = 99 k = 81 m = 162 n = 99

2

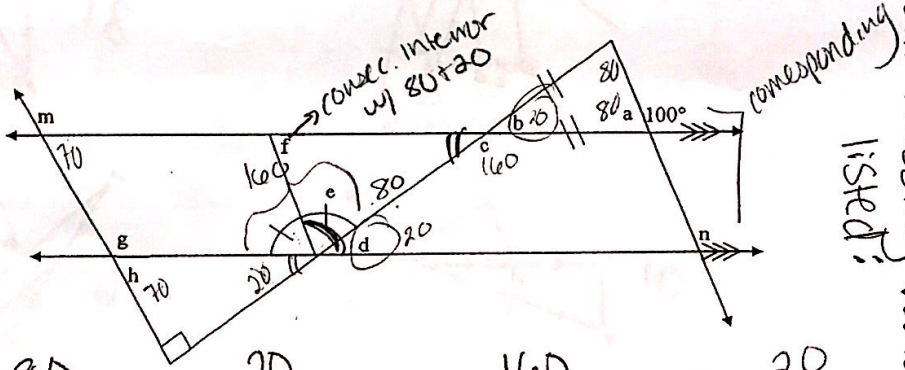

a = 80 b = 20 c = 160 d = 20

e = 80 f = 80 g = 110 h = 70

m = 110 n = 100

3

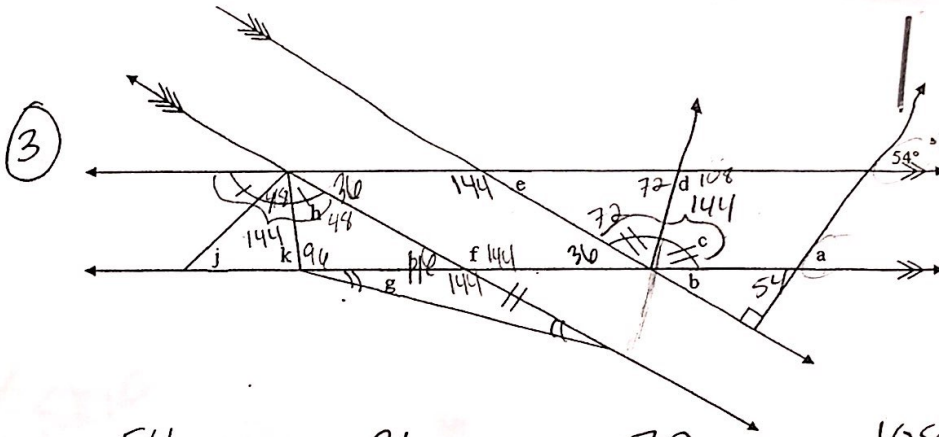

a = 54 b = 36 c = 72 d = 108

e = 36 f = 144 g = 18 h = 48

j = 48 k = 84

4

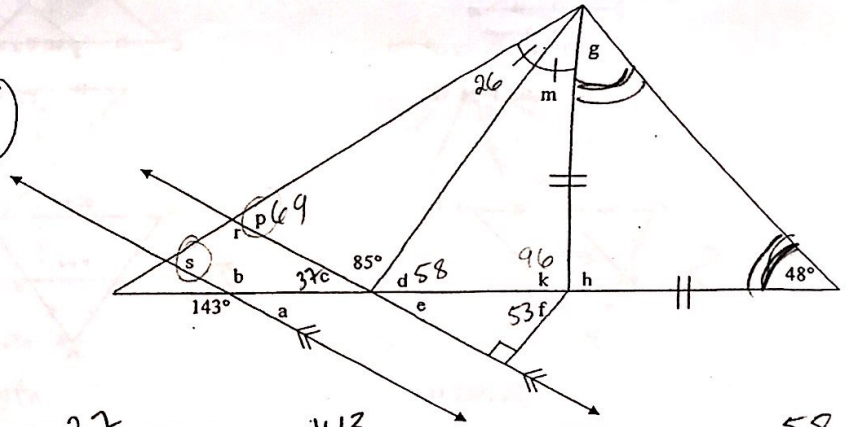

a = 37 b = 143 c = 37 d = 58

e = 37 f = 53 g = 48 h = 84

k = 96 m = 26 p = 69 r = 111

s = 69

Scanned by CamScanner